Meritko v mm; Maße in mm

RIANO 01 - PLECH - 085A
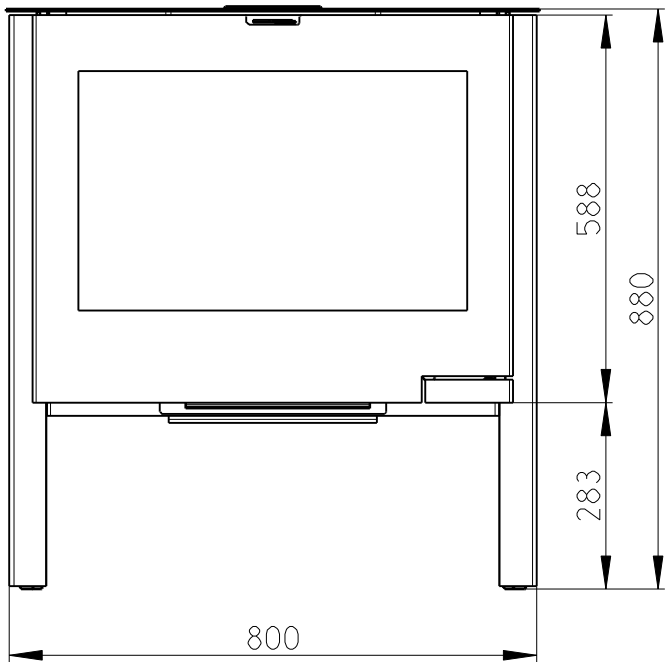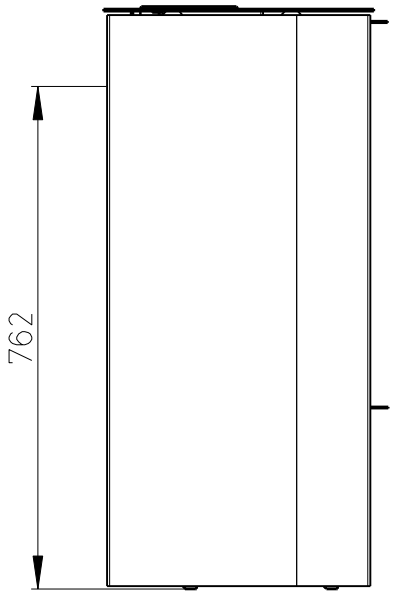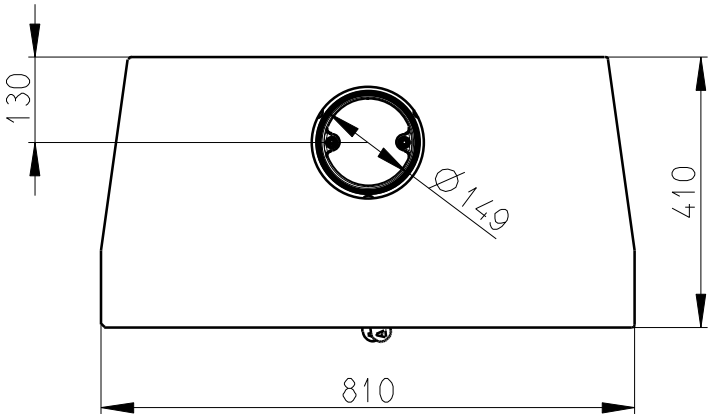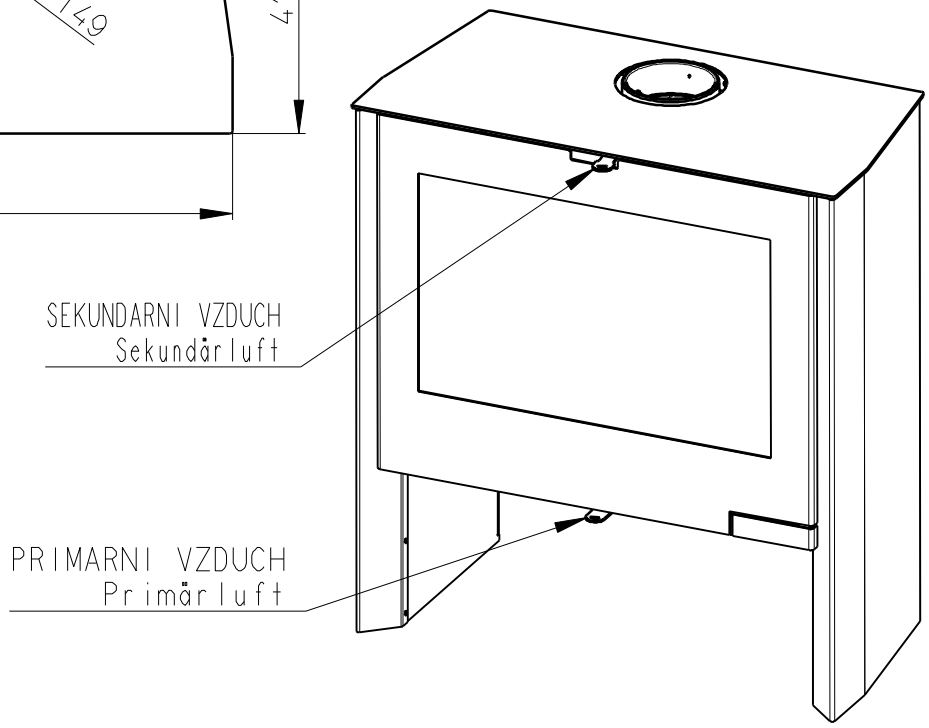
138 kg